PLAN
Stufenhochbeet „Semiramis 400 cm“

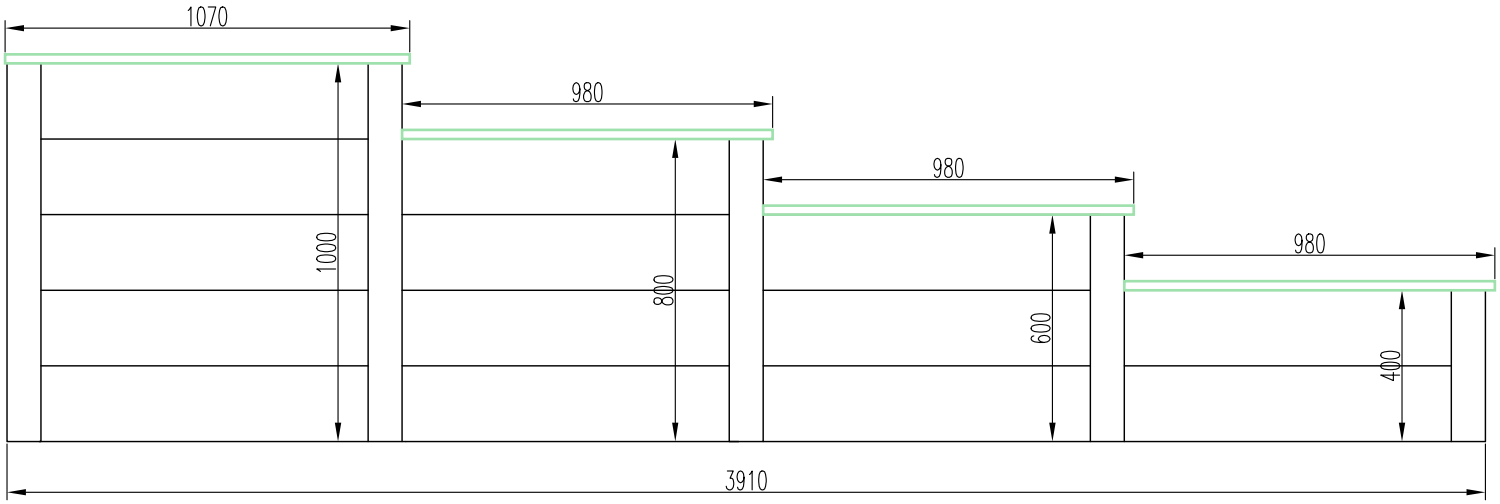

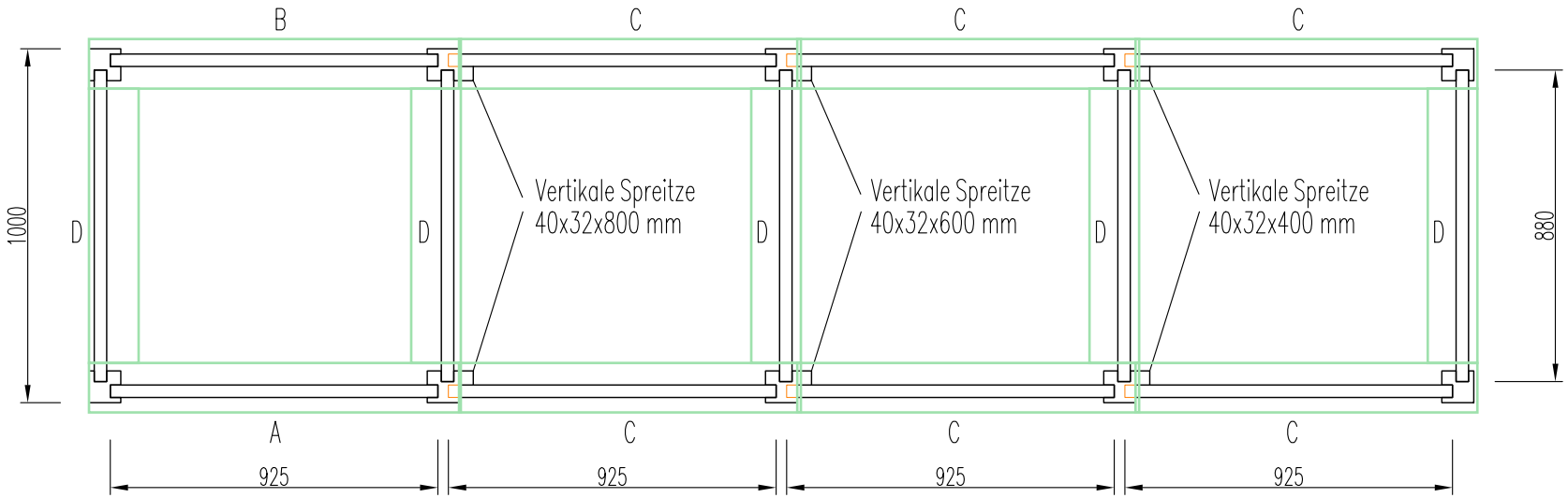

Wand A/B/C
28 Stk 200x32x925 mm

Wand D
19 Stk 200x32x880 mm

Eckkanter

4 Stk 90x90x1000 mm
2 Stk 90x90x800 mm
2 Stk 90x90x600 mm
2 Stk 90x90x400 mm

Vertikale Spreitze
2 Stk 40x32x800mm
2 Stk 40x32x600mm
2 Stk 40x32x400mm

Handlauf
2 Stk 140x24x1070 mm A/B
6 Stk 140x24x980 mm C
5 Stk 140x24x760 mm D

Spreitze
0 Stk

Plane
3 Stk 4 lfm

Gitter
2 Stk 1000x2100 mm

Schrauben
238 Stk 5,0x70 mm

J&M Bauer GmbH
Winterleiten 22
9463 Reichenfels

SAUNA BAUER

https://sauna-bauer.at
office@sauna-bauer.at
+43 4359 28048